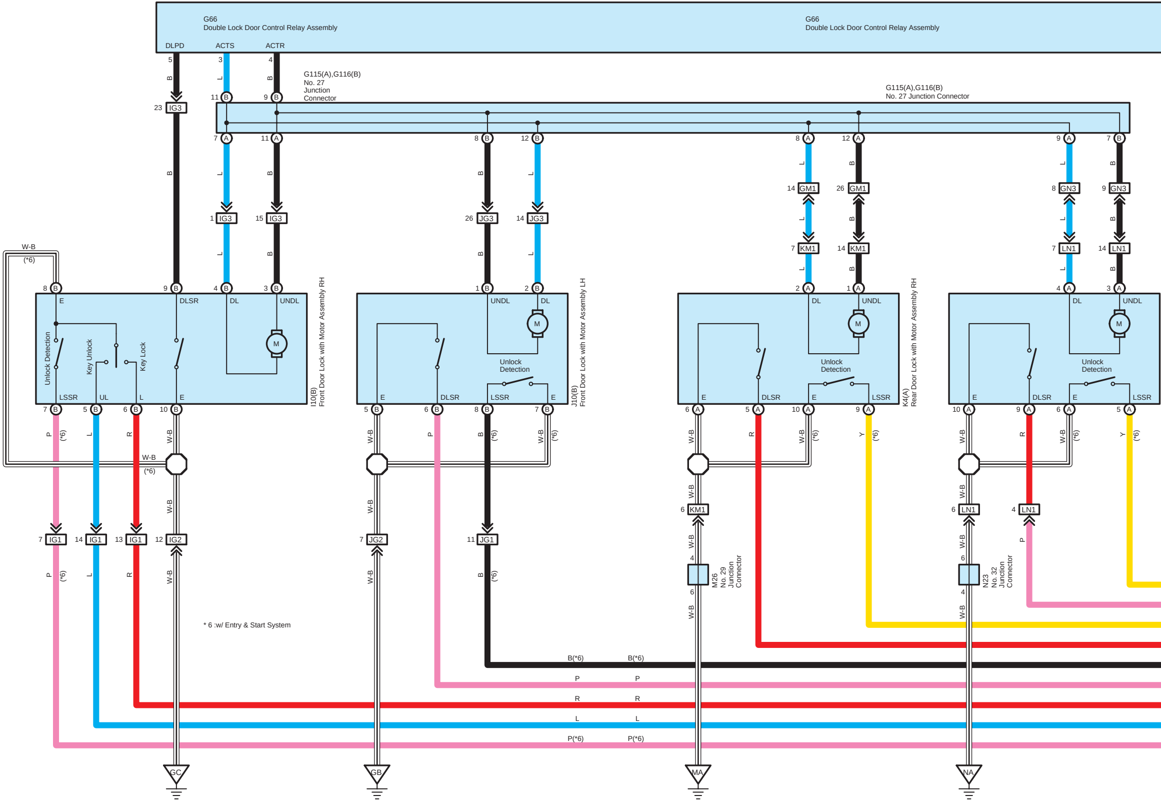
G66
Double Lock Door Control Relay Assembly
G66
Double Lock Door Control Relay Assembly
DLPD
ACTS
ACTR
G115(A),G116(B)
No. 27
Junction
Connector
G115(A),G116(B)
No. 27 Junction Connector
IG3
IG3
IG3
JG3
JG3
GM1
GM1
GN3
GN3
KM1
KM1
LN1
LN1
W-B
(*6)
E
DLSR
DL
UNDL
Unlock Detection
Key Unlock
Key Lock
LSSR
UL
L
E
M
I10(B)
Front Door Lock with Motor Assembly RH
UNDL
DL
Unlock
Detection
E
DLSR
LSSR
E
J10(B)
Front Door Lock with Motor Assembly LH
DL
UNDL
Unlock
Detection
E
DLSR
E
LSSR
K4(A)
Rear Door Lock with Motor Assembly RH
DL
UNDL
Unlock
Detection
E
DLSR
E
LSSR
IG1
IG1
IG1
IG2
JG2
JG1
KM1
LN1
LN1
M26
No. 29
Junction
Connector
N23
No. 32
Junction
Connector
B(*6)
B(*6)
P
P
R
R
L
L
P(*6)
P(*6)
GC
GB
MA
NA

* 6 :w/ Entry & Start System

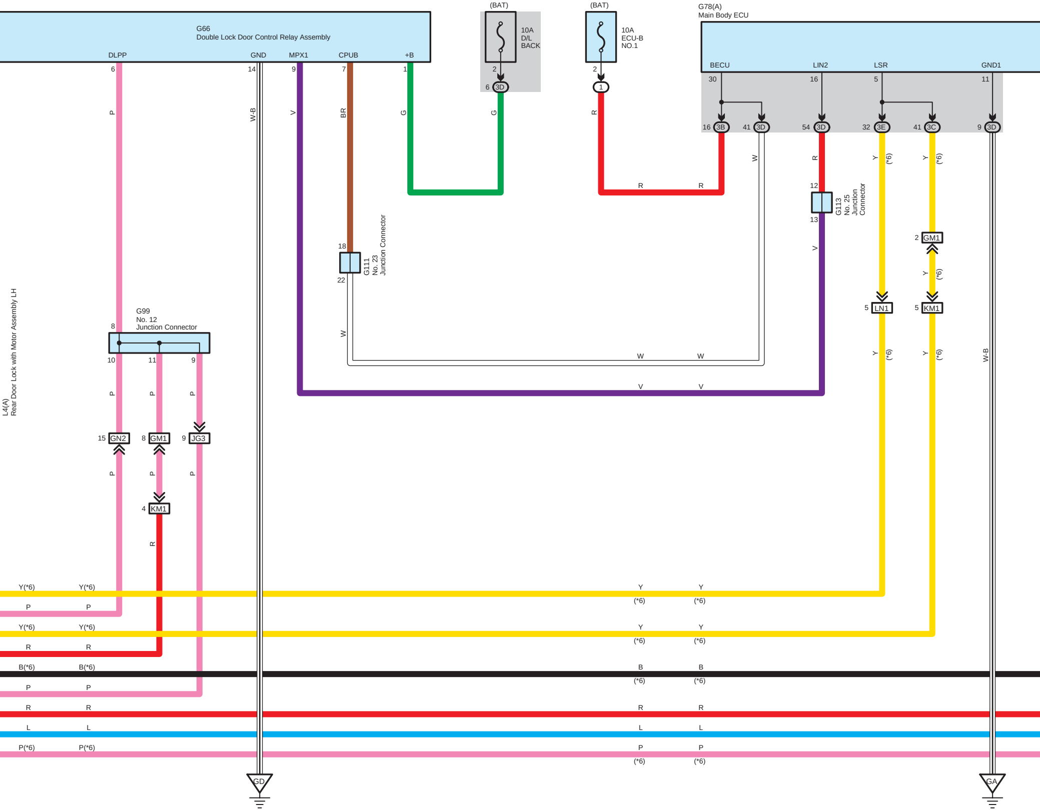
G66
Double Lock Door Control Relay Assembly
DLPP
GND
MPX1
CPUB
+B
6
14
9
7
1
P
W-B
V
BR
G
(BAT)
10A
D/L
BACK
2
6
3D
(BAT)
10A
ECU-B
NO.1
2
1
R
G78(A)
Main Body ECU
BECU
LIN2
LSR
GND1
30
16
5
11
16
3B
41
3D
54
3D
32
3E
41
3C
9
3D
R
W
R
Y (*6)
Y (*6)
12
G113
No. 25
Junction
Connector
13
V
2
GM1
Y (*6)
5
LN1
5
KM1
Y (*6)
Y (*6)
W-B
18
G111
No. 23
Junction Connector
22
W
W
W
V
V
L4(A)
Rear Door Lock with Motor Assembly LH
G99
No. 12
Junction Connector
8
10
11
9
P
P
P
15
GN2
8
GM1
9
JG3
P
P
P
4
KM1
R
Y(*6)
Y(*6)
P
P
Y(*6)
Y(*6)
R
R
B(*6)
B(*6)
P
P
R
R
L
L
P(*6)
P(*6)
Y (*6)
Y (*6)
Y (*6)
Y (*6)
B (*6)
B (*6)
R
R
L
L
P (*6)
P (*6)
GD
GA

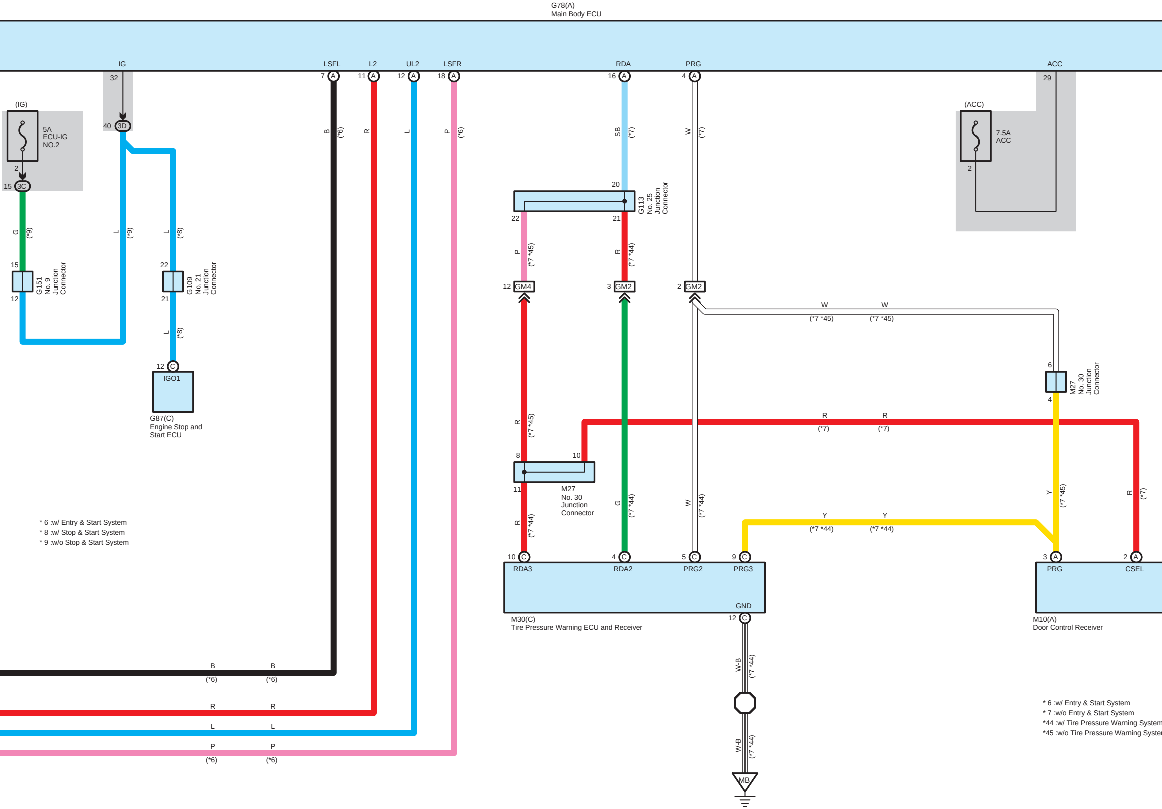
G78(A)
Main Body ECU
IG
LSFL
L2
UL2
LSFR
RDA
PRG
ACC
32
7 A
11 A
12 A
18 A
16 A
4 A
29
(IG)
5A
ECU-IG
NO.2
2
15 3C
40 3D
(ACC)
7.5A
ACC
2
B (*6)
R
L
P (*6)
SB (*7)
W (*7)
G (*9)
L (*9)
L (*8)
15
12
G151
No. 9
Junction
Connector
22
21
G109
No. 21
Junction
Connector
L (*8)
12 C
IGO1
G87(C)
Engine Stop and
Start ECU
20
22
21
G113
No. 25
Junction
Connector
P (*7 *45)
R (*7 *44)
12 GM4
3 GM2
2 GM2
W (*7 *45)
W (*7 *45)
6
4
M27
No. 30
Junction
Connector
R (*7 *45)
R (*7)
R (*7)
8
10
11
M27
No. 30
Junction
Connector
R (*7 *44)
G (*7 *44)
W (*7 *44)
Y (*7 *45)
R (*7)
Y (*7 *44)
Y (*7 *44)
10 C
4 C
5 C
9 C
RDA3
RDA2
PRG2
PRG3
GND
M30(C)
Tire Pressure Warning ECU and Receiver
12 C
3 A
2 A
PRG
CSEL
M10(A)
Door Control Receiver
W-B (*7 *44)
W-B (*7 *44)
MB
B (*6)
B (*6)
R
R
L
L
P (*6)
P (*6)

* 6 :w/ Entry & Start System
* 8 :w/ Stop & Start System
* 9 :w/o Stop & Start System

* 6 :w/ Entry & Start System
* 7 :w/o Entry & Start System
*44 :w/ Tire Pressure Warning System
*45 :w/o Tire Pressure Warning Syste

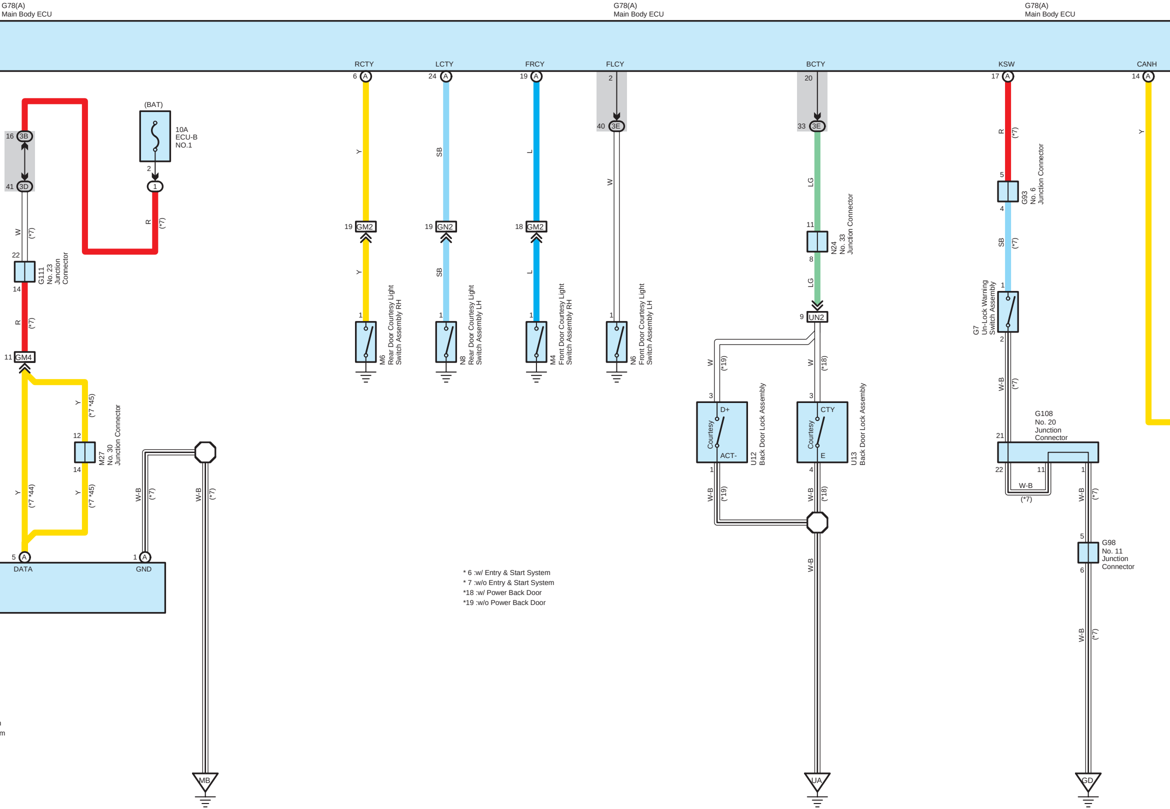
G78(A)
Main Body ECU
G78(A)
Main Body ECU
G78(A)
Main Body ECU
RCTY
LCTY
FRCY
FLCY
BCTY
KSW
CANH
6 A
24 A
19 A
2
20
17 A
14 A
16 3B
41 3D
(BAT)
10A
ECU-B
NO.1
2
1
R
(*7)
W
(*7)
22
G111
No. 23
Junction
Connector
14
R
(*7)
11 GM4
Y
Y
SB
SB
L
L
W
40 3E
33 3E
LG
11
N24
No. 33
Junction Connector
8
LG
9 UN2
19 GM2
19 GN2
18 GM2
1
1
1
1
M6
Rear Door Courtesy Light
Switch Assembly RH
N8
Rear Door Courtesy Light
Switch Assembly LH
M4
Front Door Courtesy Light
Switch Assembly RH
N6
Front Door Courtesy Light
Switch Assembly LH
R
(*7)
5
G93
No. 6
Junction Connector
4
SB
(*7)
1
G7
Un-Lock Warning
Switch Assembly
2
W-B
(*7)
Y
Y
(*7 *45)
12
M27
No. 30
Junction Connector
14
Y
(*7 *44)
Y
(*7 *45)
W-B
(*7)
W-B
(*7)
5 A
DATA
1 A
GND
W
(*19)
W
(*18)
3
D+
Courtesy
ACT-
1
U12
Back Door Lock Assembly
3
CTY
Courtesy
E
4
U13
Back Door Lock Assembly
W-B
(*19)
W-B
(*18)
W-B
G108
No. 20
Junction
Connector
21
22
11
1
W-B
(*7)
W-B
(*7)
5
G98
No. 11
Junction
Connector
6
W-B
(*7)
MB
UA
GD

* 6 :w/ Entry & Start System
* 7 :w/o Entry & Start System
*18 :w/ Power Back Door
*19 :w/o Power Back Door

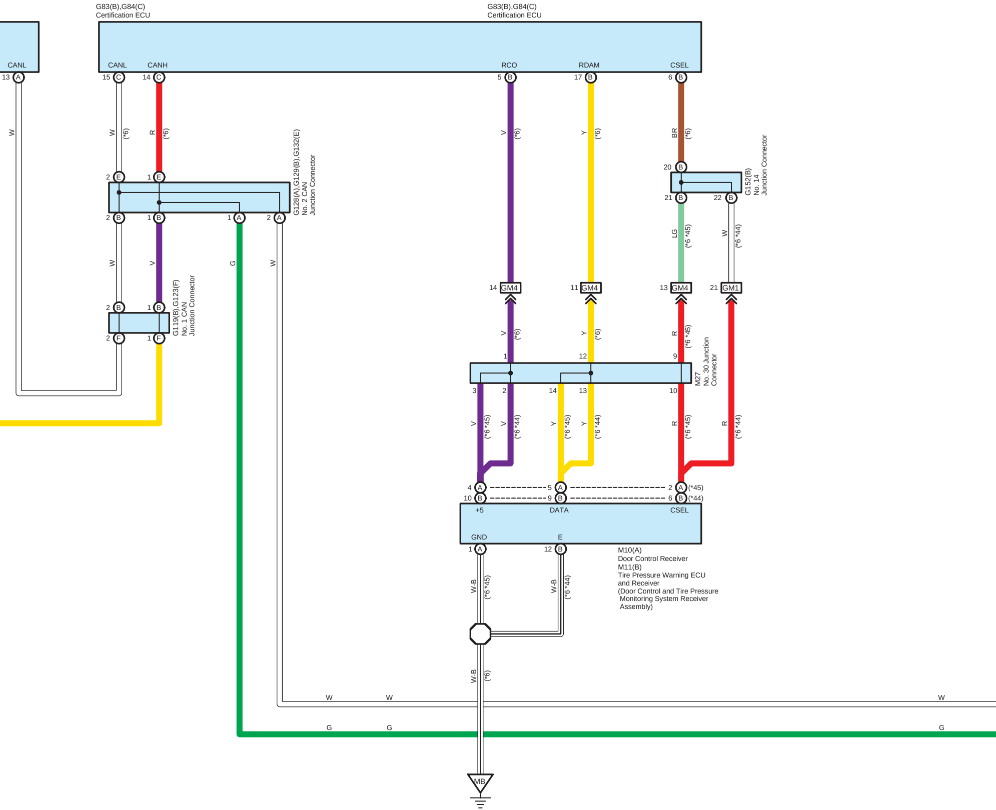
G83(B),G84(C)
Certification ECU
G83(B),G84(C)
Certification ECU
CANL
13 A
W
CANL
CANH
15 C
14 C
W (*6)
R (*6)
RCO
RDAM
CSEL
5 B
17 B
6 B
V (*6)
Y (*6)
BR (*6)
20 B
21 B
22 B
G152(B)
No. 14
Junction Connector
LG (*6 *45)
W (*6 *44)
2 E
1 E
2 B
1 B
1 A
2 A
G128(A),G129(B),G132(E)
No. 2 CAN
Junction Connector
W
V
G
W
2 B
1 B
2 F
1 F
G119(B),G123(F)
No. 1 CAN
Junction Connector
14 GM4
11 GM4
13 GM4
21 GM1
V (*6)
Y (*6)
R (*6 *45)
1
12
9
M27
No. 30 Junction
Connector
3
2
14
13
10
V (*6 *45)
V (*6 *44)
Y (*6 *45)
Y (*6 *44)
R (*6 *45)
R (*6 *44)
4 A
5 A
2 A (*45)
10 B
9 B
6 B (*44)
+5
DATA
CSEL
GND
E
1 A
12 B
M10(A)
Door Control Receiver
M11(B)
Tire Pressure Warning ECU
and Receiver
(Door Control and Tire Pressure
Monitoring System Receiver
Assembly)
W-B (*6 *45)
W-B (*6 *44)
W-B (*6)
W
W
W
G
G
G
MB

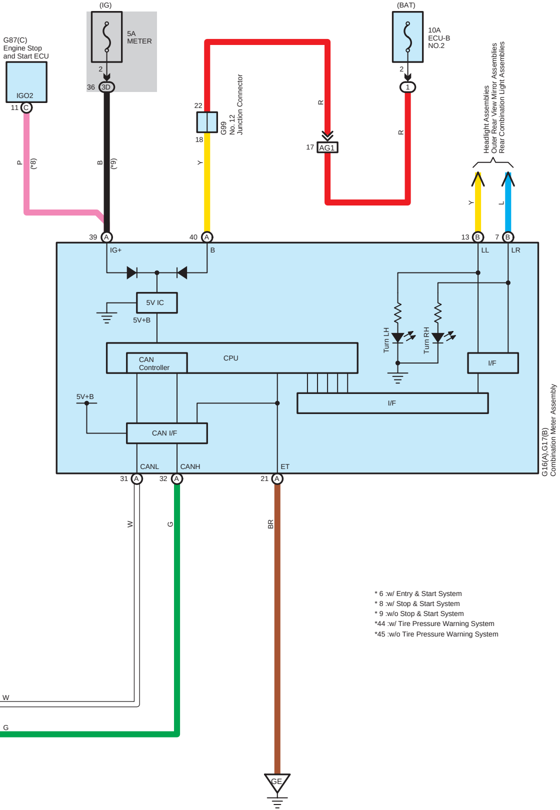
(IG)
5A
METER
(BAT)
10A
ECU-B
NO.2
G87(C)
Engine Stop
and Start ECU
IGO2
11 C
2
36 3D
2
1
22
18
G99
No. 12
Junction Connector
R
17 AG1
R
P
(*8)
B
(*9)
Y
Headlight Assemblies
Outer Rear View Mirror Assemblies
Rear Combination Light Assemblies
Y
L
39 A
40 A
13 B
7 B
IG+
B
LL
LR
5V IC
5V+B
CPU
CAN
Controller
Turn LH
Turn RH
I/F
I/F
5V+B
CAN I/F
CANL
CANH
ET
G16(A),G17(B)
Combination Meter Assembly
31 A
32 A
21 A
W
G
BR
W
G
GE

* 6 :w/ Entry & Start System
* 8 :w/ Stop & Start System
* 9 :w/o Stop & Start System
*44 :w/ Tire Pressure Warning System
*45 :w/o Tire Pressure Warning System